REVISIONS			
REV	DESCRIPTION	Date	APPROVED

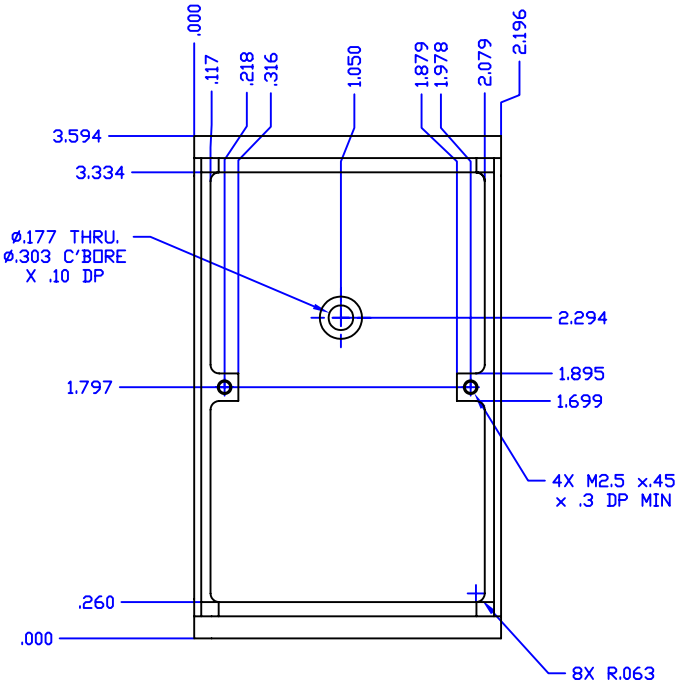

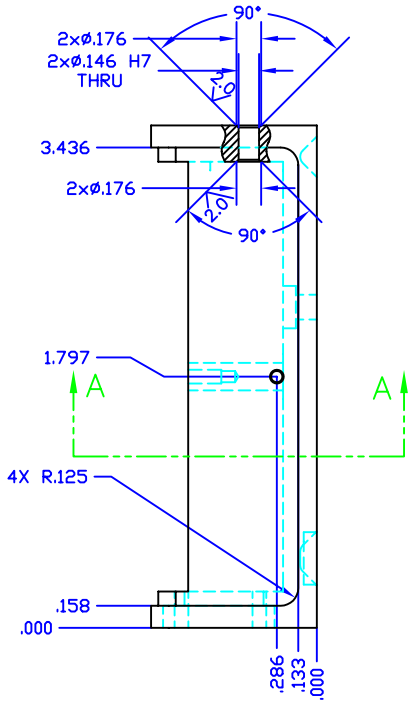

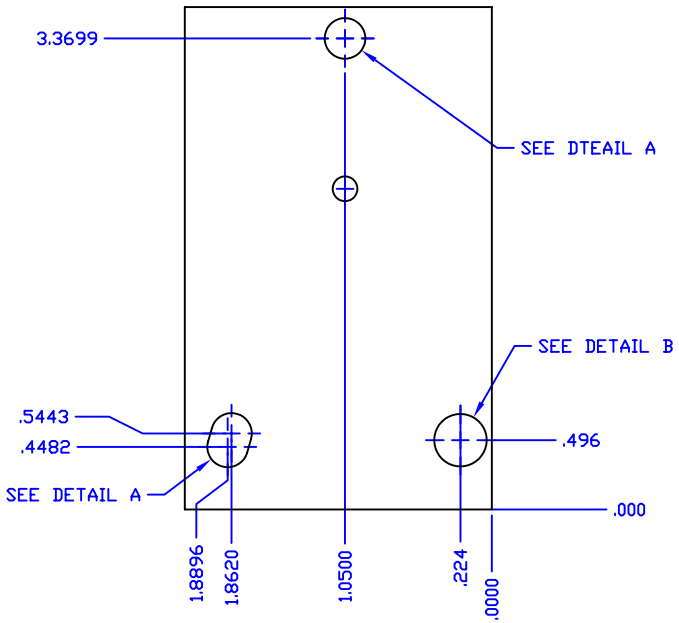

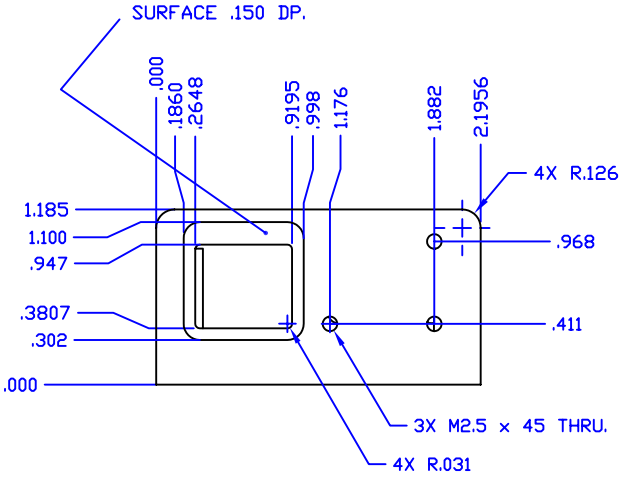

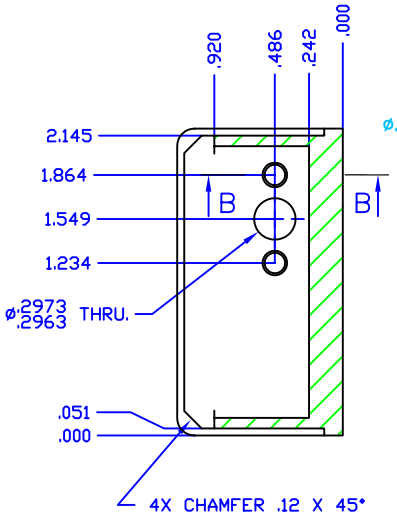

SECTION A–A

CONE AND SLOT
DETAIL "A"
SCALE = 2X

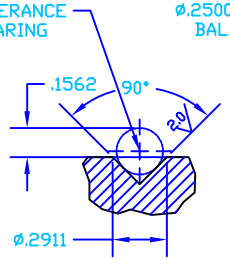

PAD DETAIL "B"
SCALE = 2X

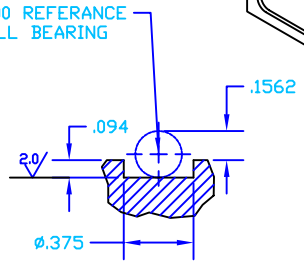

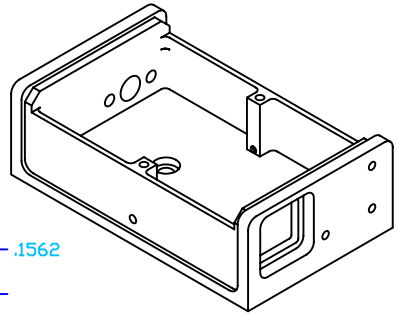

NOTES:
1. DO NOT SAND BLAST.

MATERIAL	TREATMENT
AL 6061 OR EQUIV.	

TOLERANCES	SIGNED	
UNLESS SPECIFIED: DIMENSIONS ARE IN INCHES .XX = ± .01 .XXX = ± .005 .XXXX = ± .0010 ANG. = ± 0°30' REMOVE ALL BURRS AND SHARP EDGES in [mm] 20	DATE 05.07.08 DRAWN KEN WYNN ENGINEER AD CHECKED	Atlas Brandeis University Waltham MA 02254 Title BCAM-AZ BASE DWG NO. 200-05-01A REV. Scale NONE Sheet 1 of 1